μChemLab™: Bio Detector

A hand-held instrument for bio analysis

Fact Sheet

Programs at Sandia National Laboratories are developing portable, compact analysis systems for multiple homeland security, defense, environmental, and medical applications.

The μChemLab™ Bio Detector enables fast microfluidic separations of biological samples with high sensitivity. It miniaturizes bench-scale analyses utilizing fabricated microchannels in a hand-held, low-power device. Many different separations can be run simultaneously, and identification of the compound of interest is determined from unique retention-time signatures.

Protein biotoxin detection

Designed for the rapid detection of proteins, the current laboratory demonstration unit has been used to identify biotoxins such as ricin, staphylococcal enterotoxin B, and botulinum toxin; its capability is now being extended to enable identification of viruses and bacteria. Parallel analysis channels provide highly accurate detection at nanomolar sensitivities.

Second-generation biotoxin detection system

Microfluidic separations

The analyses take place in 10 cm long sealed microchannels that are chemically etched in 2 cm square glass chips. The unique chip design allows protein samples tagged with a fluorescent dye to be pressure injected directly onto the chip with no sample carry-over.

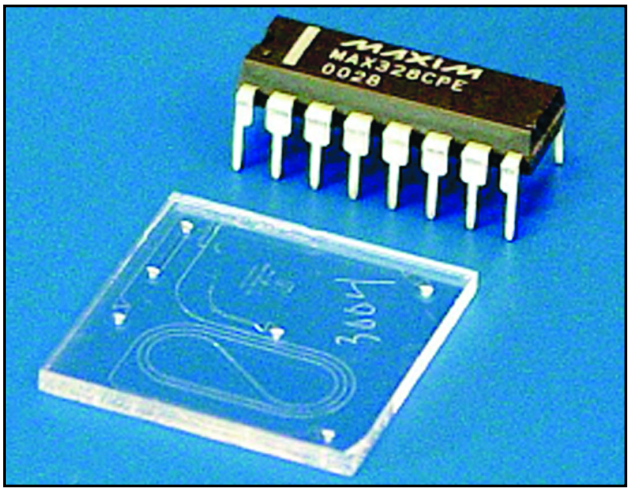

Microchannels etched in fused-silica chip

Electric fields are used to manipulate nanoliter volumes of fluids in the microchannels. Components of the sample are sorted for identification as they move through the channel under the influence of an electric field. The length of time a compound is retained reveals its identity. Retention times are influenced by conditions in the channel. Separations are complete in less than 10 minutes. A miniature violet laser diode excites dye-labeled proteins, inducing fluorescence. A photomultiplier tube detects the fluorescence emission with nanomolar sensitivity. On-board data processing

SAND2003-8569P
September 11, 2003

Sandia is a multiprogram laboratory operated by Sandia Corporation, a Lockheed Martin Company, for the United States Department of Energy's National Nuclear Security Administration under contract DE-AC04-94AL85000.

Sandia National Laboratories

AY4775

can identify target proteins in real time.

Systems integration and engineering

Sandia has successfully miniaturized and integrated high-voltage (5kV) power supplies and control systems to control electrokinetic flows in a portable device. Modular fluid-handling hardware provides low dead-volume interfaces for sample introduction and liquid-tight fluidic connections to reservoir cartridges, enabling rapid replacement of the fluidic chip, injector, and operating solutions. An integrated optical system provides confocal excitation and emission collection while providing for easy alignment.

Status and future development

Several areas of investigation offer increased detection capability. These include preconcentration techniques developed at Oak Ridge National Laboratory that have demonstrated 100-fold increases in sensitivity. In conjunction with collaborators, Sandia has also developed novel materials with controlled porosity for the purpose of tailoring surface chemistry to expand microseparation methods. Sandia has also successfully demonstrated the first truly microscale high-performance liquid chromatography (HPLC) system. Additionally, manipulations of electrokinetic flows for the purpose of on-chip sample preparation, reagent mixing, ultra-high pressure generation, and packed-bed chromatography offer increased capabilities.The integration of microsystems and microseparations-based methods into devices that are rugged, compact, portable, upgradable, and tailored for the end-user is key to successful program development. Sandia's microsystems and microfluidics expertise will continue to be relied on to create future prototypes.

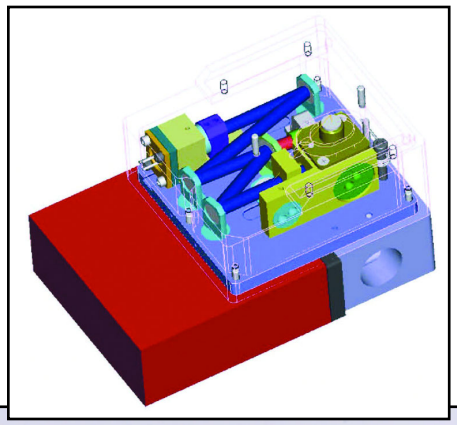

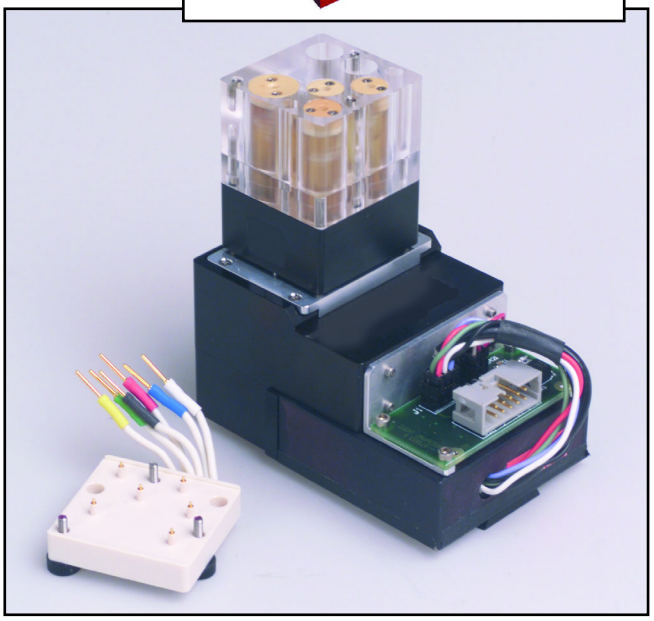

Top: Model of Sandia-developed laser-induced fluorescence detector

Bottom: Separation module containing the microfluidic system assembled onto the optical module, and high-voltage interconnect plate (lower left)

For more information contact
Sandia National Laboratories
Art Pontau at (925) 294-3159
aeponta@sandia.gov